COPYRIGHT AND CONFIDENTIAL
The information on this document is the property of BHARAT HEAVY ELECTRICALS LIMITED,
It must not be used directly or indirectly in any way detrimental to the interest of the company.

GI CABLE DUCTS FABRICATION DETILS AND ACCESSORIES (CATEGORY-1)

This specification shall be read in conjunction with PY 55147, Technical specifications for GI Cable /Tubes ducts and accessories.

This specification covers the constructional, dimensional and sectional details of various kinds of GI cable ducts fabrication details and accessories (Category-1) and same are given in the following pages.

COPYRIGHT AND CONFIDENTIAL
The information on this document is the property of BHARAT HEAVY ELECTRICALS LIMITED.
It must not be used directly or indirectly in any way detrimental to the interest of the company.

TYPICAL ARRANGEMENT FOR STRAIGHT RUN DUCT ALONG WITH ACCESSORIES AND JOINING PLATES (CATEGORY-1)

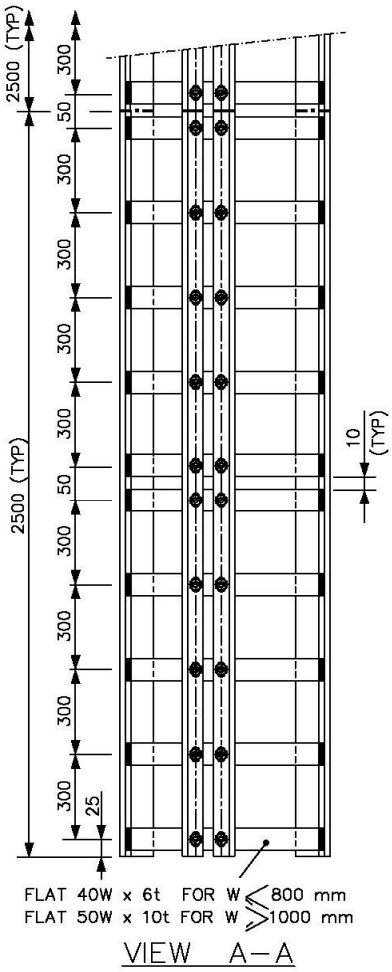

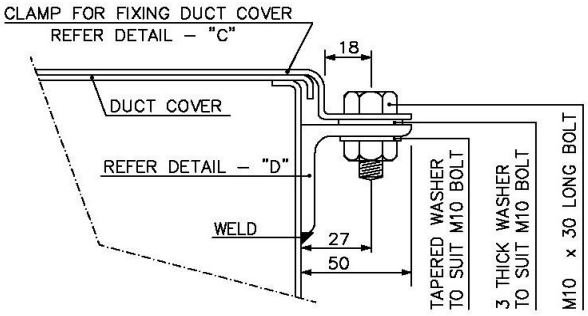

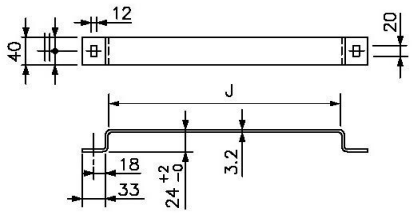

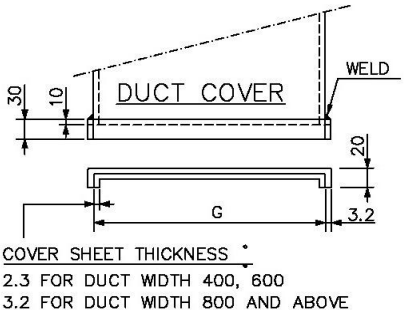

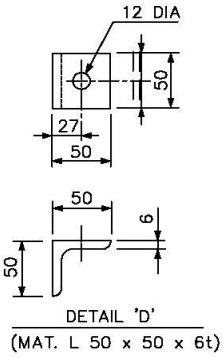

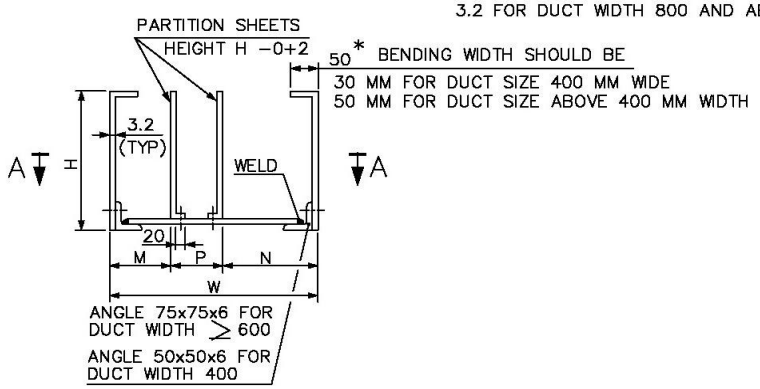

DUCT BODY

STRAIGHT RUN OF DUCT

COPYRIGHT AND CONFIDENTIAL
The information on this document is the property of BHARAT HEAVY ELECTRICALS LIMITED .
It must not be used directly or indirectly in any way detrimental to the interest of the company.

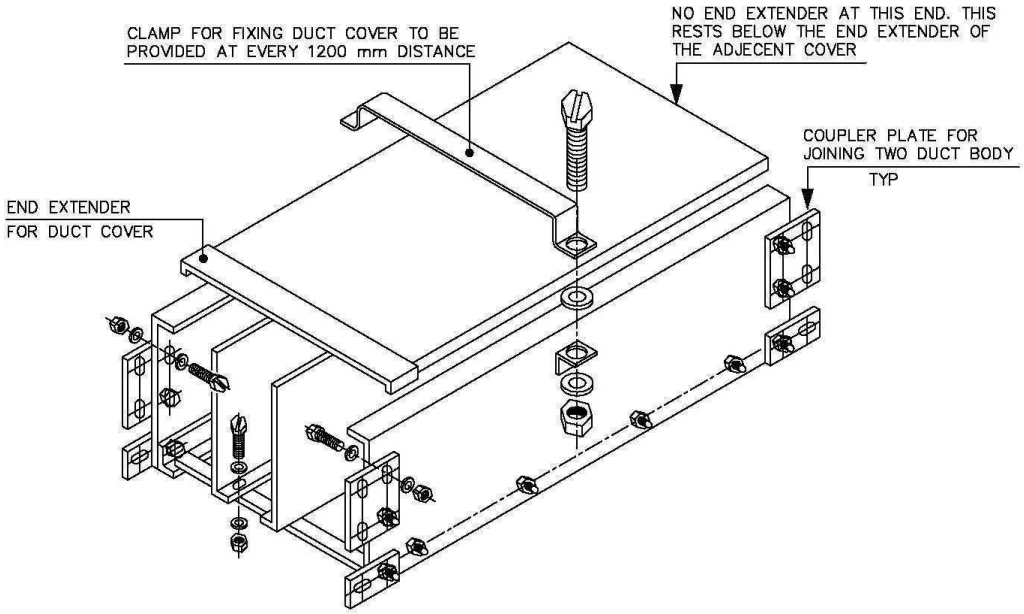

FIXING OF COVER TO DUCT BODY

TABLE – A FOR CABLES ONLY

DETAIL NO.	W	H	M	N	P	G	J
D1–101	1200	400	300	750	150	1210^{+0}_{-2}	1212 ± 1
D1–102	1000	400	250	600	150	1010^{+0}_{-2}	1012 ± 1
D1–103	800	300	200	450	150	810^{+0}_{-2}	812 ± 1
D1–104	600	300	150	300	150	610^{+0}_{-2}	612 ± 1
D1–105	400	200	100	150	150	410^{+0}_{-2}	412 ± 1

MATERIAL CODES FOR STRAIGHT RUN OF DUCT WITH JOINTING PLATES AND COVER SHEETS – (CAT –1)

VARIANT NO.	DESCRIPTION	MATERIAL CODE
1.	1200mm Width, 400mm Height straight run duct with accessories including Joining plate-CAT 1	PY9755148013
2.	1000mm Width, 400mm Height straight run duct with accessories including Joining plate-CAT 1	PY9755148021
3.	800mm Width, 300mm Height straight run duct with accessories including Joining plate-CAT 1	PY9755148030
4.	600mm Width, 300mm Height straight run duct with accessories including Joining plate-CAT 1	PY9755148048
5.	400mm Width, 200mm Height straight run duct with accessories including Joining plate-CAT 1	PY9755148056

COPYRIGHT AND CONFIDENTIAL
The information on this document is the property of BHARAT HEAVY ELECTRICALS LIMITED.
It must not be used directly or indirectly in any way detrimental to the interest of the company.

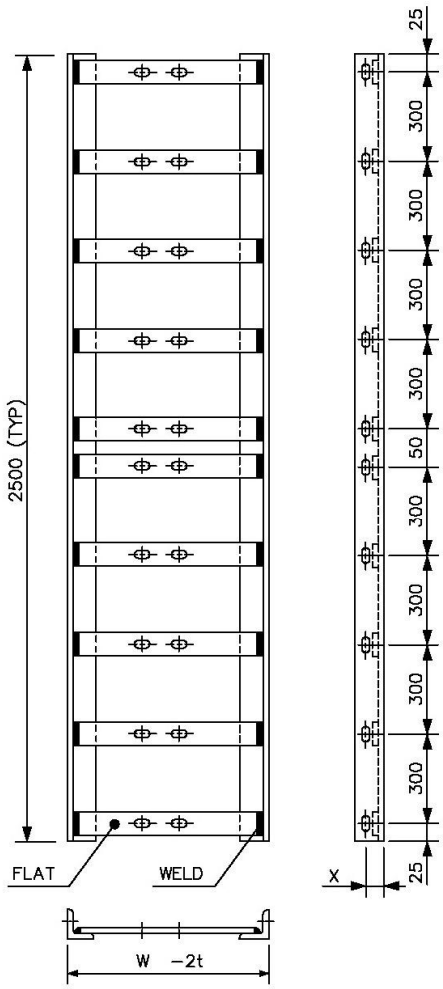

SECTIONAL VIEW P−P

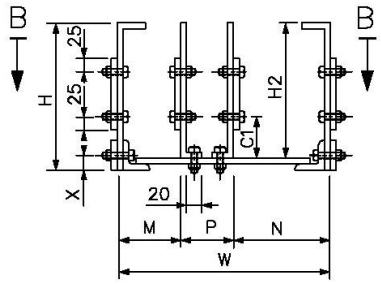

DUCT BODY BOLTED ASSY.
SECTIONAL VIEW B−B

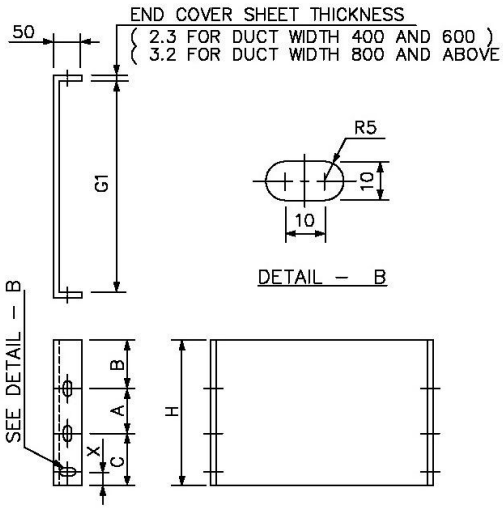

END COVER DETAIL

TABLE FOR FIXING COUPLER PLATES WITH DUCT SIDES/PARTITION SHEETS

W	A	B	C	F	H2	C1	G1	X
1200	200	80	120	250	384	104	1203	37.5
1000	200	80	120	250	384	104	1003	37.5
800	150	50	100	200	288	88	803	37.5
600	150	50	100	200	288	88	603	37.5
400	75	50	75	125	188	63	403	25

GENERAL BOLTING DETAILS

COPYRIGHT AND CONFIDENTIAL
The information on this document is the property of BHARAT HEAVY ELECTRICALS LIMITED.
It must not be used directly or indirectly in any way detrimental to the interest of the company.

TYPICAL ARRANGEMENT FOR DUCT EQUAL TEE ALONG WITH ACCESSORIES AND JOINTING PLATES (CATEGORY-1)

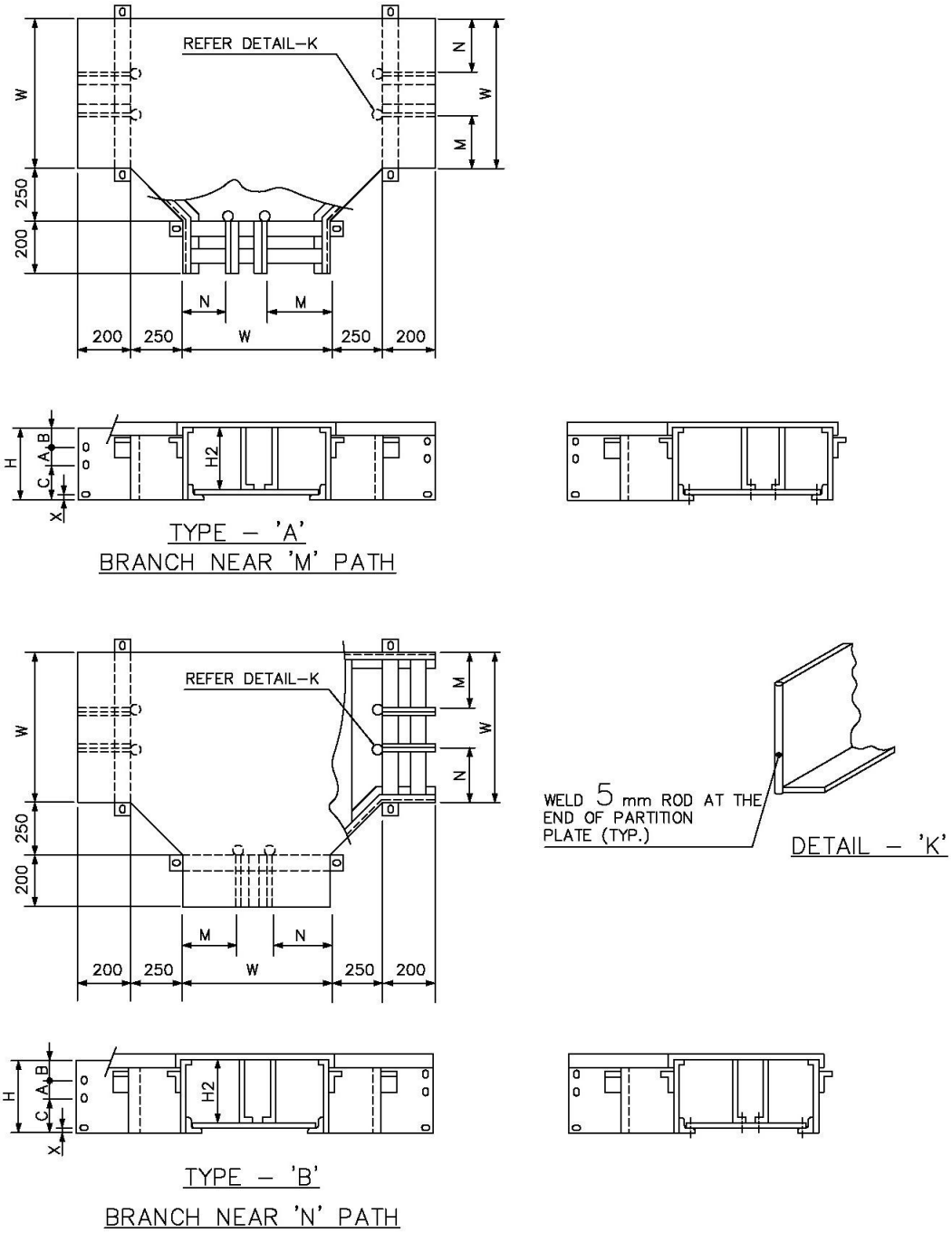

DUCT EQUAL TEE

COPYRIGHT AND CONFIDENTIAL
The information on this document is the property of BHARAT HEAVY ELECTRICALS LIMITED .
It must not be used directly or indirectly in any way detrimental to the interest of the company.

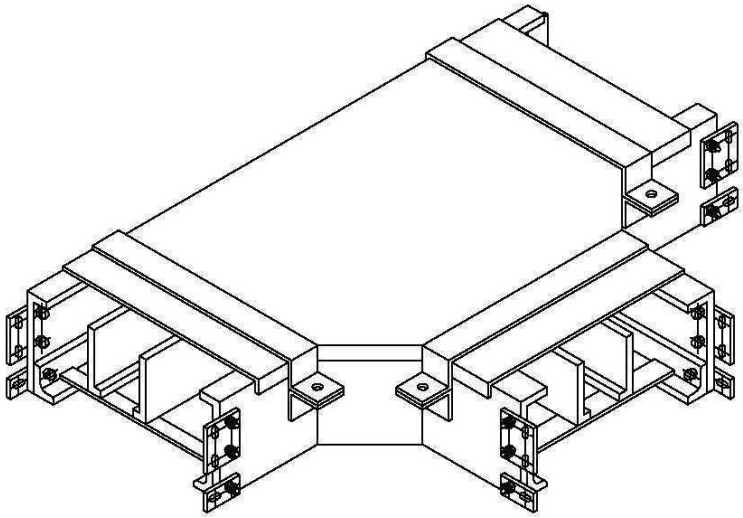

MATERIAL CODES FOR DUCT EQUAL TEE (TYPE-A) WITH JOINTING PLATES AND COVER SHEETS (CATEGORY-1)

VARIANT NO.	DESCRIPTION	MATERIAL CODE
6.	1200mm Width, 400mm Height duct equal tee (Type-A) with accessories including Joining plate-CAT 1.	PY9755148064
7.	1000mm Width, 400mm Height duct equal tee (Type-A) with accessories including Joining plate-CAT 1.	PY9755148072
8.	800mm Width, 300mm Height duct equal tee (Type-A) with accessories including Joining plate-CAT 1.	PY9755148080
9.	600mm Width, 300mm Height duct equal tee (Type-A) with accessories including Joining plate-CAT 1.	PY9755148099
10.	400mm Width, 200mm Height duct equal tee (Type-A) with accessories including Joining plate-CAT 1.	PY9755148102

COPYRIGHT AND CONFIDENTIAL
The information on this document is the property of BHARAT HEAVY ELECTRICALS LIMITED .
It must not be used directly or indirectly in any way detrimental to the interest of the company.

MATERIAL CODES FOR DUCT EQUAL TEE (TYPE-B) WITH JOINTING PLATES AND COVER SHEETS (CATEGORY-1)

VARIANT NO.	DESCRIPTION	MATERIAL CODE
11.	1200mm Width, 400mm Height duct equal tee (Type-B) with accessories including Joining plate-CAT 1.	PY9755148110
12.	1000mm Width, 400mm Height duct equal tee (Type-B) with accessories including Joining plate-CAT 1.	PY9755148129
13.	800mm Width, 300mm Height duct equal tee (Type-B) with accessories including Joining plate-CAT 1.	PY9755148137
14.	600mm Width, 300mm Height duct equal tee (Type-B) with accessories including Joining plate-CAT 1.	PY9755148145
15.	400mm Width, 200mm Height duct equal tee (Type-B) with accessories including Joining plate-CAT 1.	PY9755148153

COPYRIGHT AND CONFIDENTIAL
The information on this document is the property of BHARAT HEAVY ELECTRICALS LIMITED .
It must not be used directly or indirectly in any way detrimental to the interest of the company.

TYPICAL ARRANGEMENT FOR DUCT EXPENDER TEE ALONG WITH ACCESSORIES AND JOITNING PLATES (CATEGORY-1)

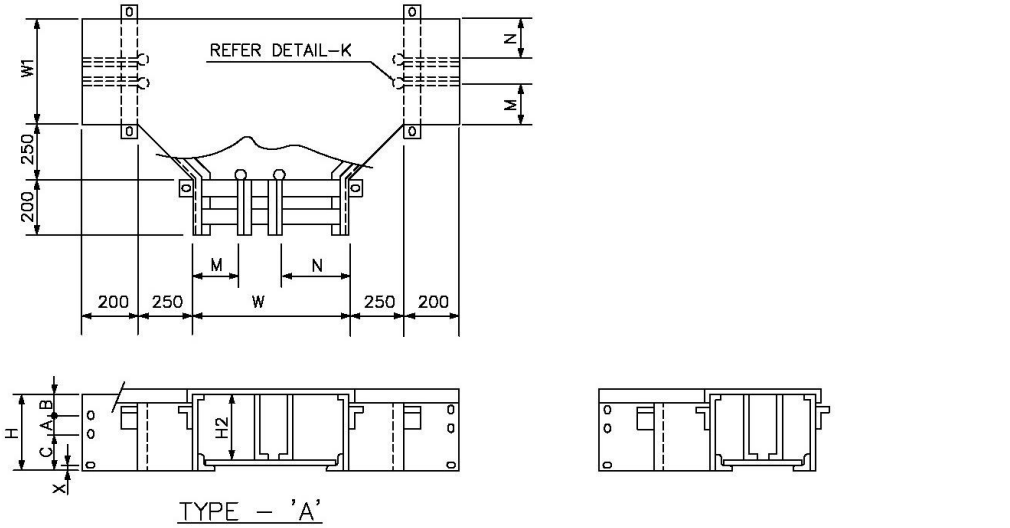

TYPE – 'A'
BRANCH NEAR 'M' PATH

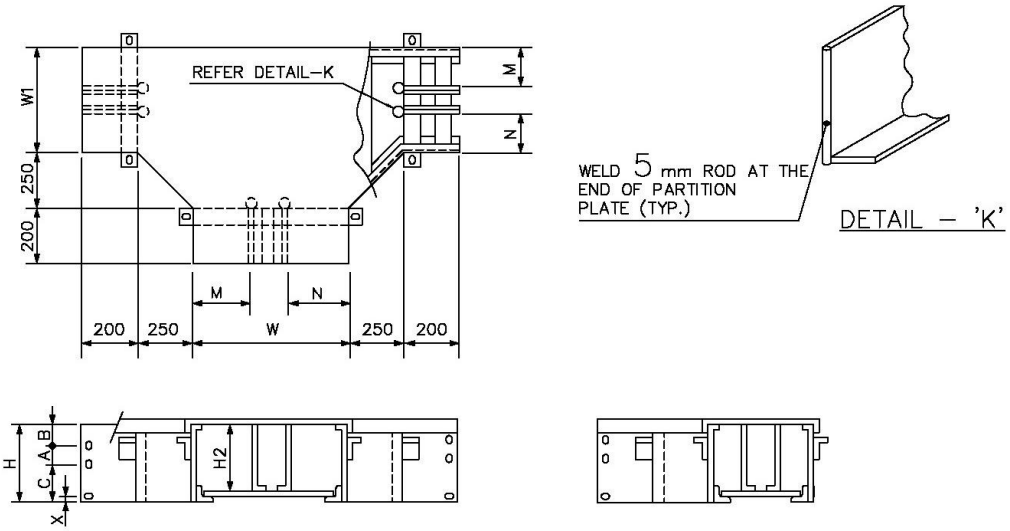

DETAIL – 'K'

TYPE – 'B'
BRANCH NEAR 'N' PATH

DUCT EXPANDER TEE

COPYRIGHT AND CONFIDENTIAL
The information on this document is the property of BHARAT HEAVY ELECTRICALS LIMITED .
It must not be used directly or indirectly in any way detrimental to the interest of the company.

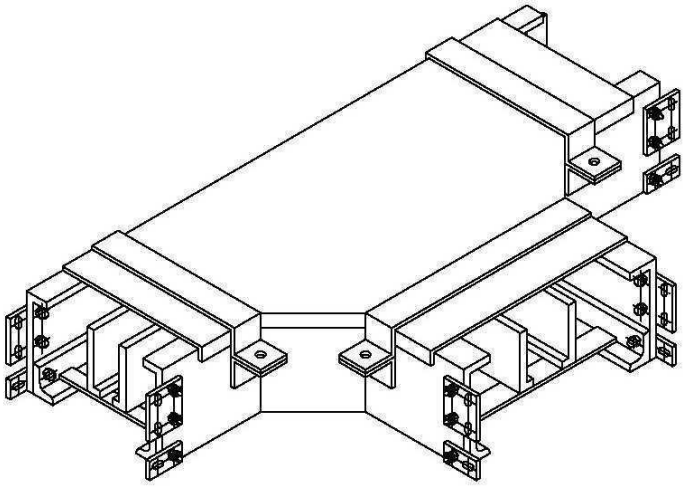

MATERIAL CODES FOR DUCT EXPENDER TEE (TYPE-A) WITH JOINTING PLATES AND COVER SHEETS (CATEGORY-1)

VARIANT NO.	DESCRIPTION	MATERIAL CODE
16.	800mm Width, 400mm Height to 1200mm width duct expender tee (Type-A) with accessories including Joining plate-CAT 1.	PY9755148161
17.	600mm Width, 400mm Height to 1200mm width duct expender tee (Type-A) with accessories including Joining plate-CAT 1.	PY9755148170
18.	600mm Width, 400mm Height to 1000mm width duct expender tee (Type-A) with accessories including Joining plate-CAT 1.	PY9755148188
19.	400mm Width, 300mm Height to 800mm width duct expender tee (Type-A) with accessories including Joining plate-CAT 1.	PY9755148196
20.	400mm Width, 300mm Height to 600mm width duct expender tee (Type-A) with accessories including Joining plate-CAT 1.	PY9755148200

COPYRIGHT AND CONFIDENTIAL
The information on this document is the property of BHARAT HEAVY ELECTRICALS LIMITED .
It must not be used directly or indirectly in any way detrimental to the interest of the company.

MATERIAL CODES FOR DUCT EXPENDER TEE (TYPE-B) WITH JOINTING PLATES AND COVER SHEETS (CATEGORY-1)

VARIANT NO.	DESCRIPTION	MATERIAL CODE
21.	800mm Width, 400mm Height to 1200mm width duct expender tee (Type-B) with accessories including Joining plate-CAT 1.	PY9755148218
22.	600mm Width, 400mm Height to 1200mm width duct expender tee (Type-B) with accessories including Joining plate-CAT 1.	PY9755148226
23.	600mm Width, 400mm Height to 1000mm width duct expender tee (Type-B) with accessories including Joining plate-CAT 1.	PY9755148234
24.	400mm Width, 300mm Height to 800mm width duct expender tee (Type-B) with accessories including Joining plate-CAT 1.	PY9755148242
25.	400mm Width, 300mm Height to 600mm width duct expender tee (Type-B) with accessories including Joining plate-CAT 1.	PY9755148250

COPYRIGHT AND CONFIDENTIAL
The information on this document is the property of BHARAT HEAVY ELECTRICALS LIMITED .
It must not be used directly or indirectly in any way detrimental to the interest of the company.

TYPICAL ARRANGEMENT FOR DUCT REDUCER TEE ALONG WITH ACCESSORIES AND JOINTING PLATES (CATEGORY-1)

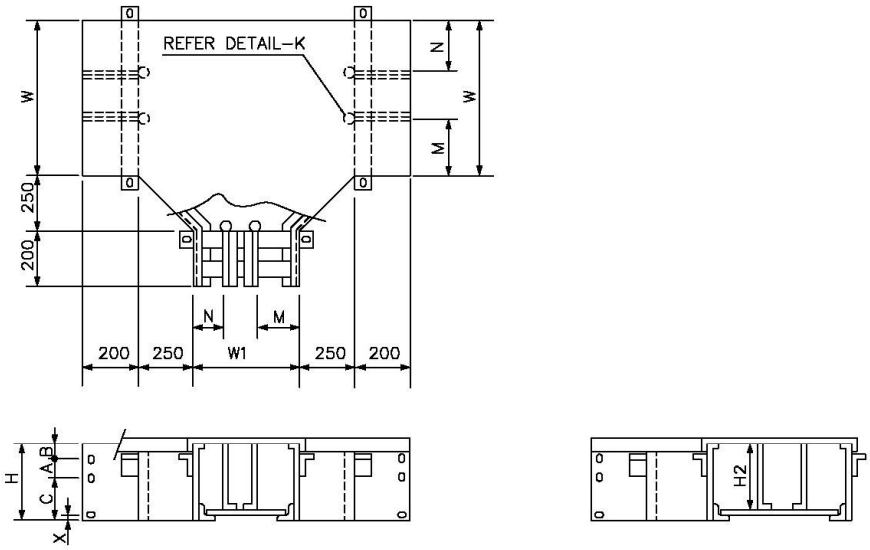

TYPE – 'A'
BRANCH NEAR 'M' PATH

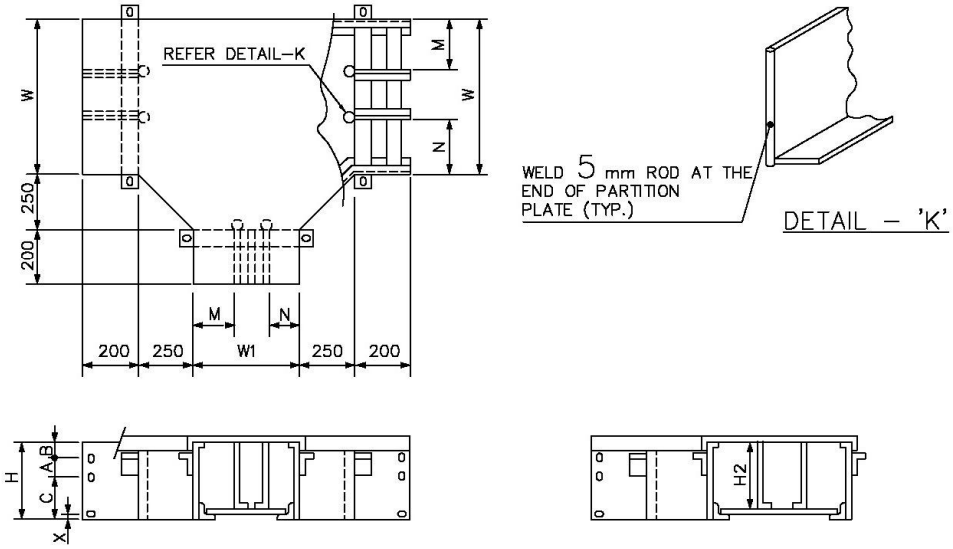

TYPE – 'B'
BRANCH NEAR 'N' PATH

DUCT REDUCER TEE

COPYRIGHT AND CONFIDENTIAL
The information on this document is the property of BHARAT HEAVY ELECTRICALS LIMITED .
It must not be used directly or indirectly in any way detrimental to the interest of the company.

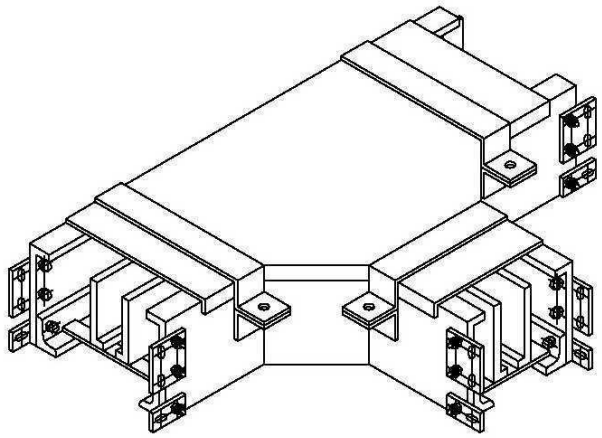

MATERIAL CODES FOR DUCT REDUCER TEE (TYPE-A) WITH JOINTING PLATES AND COVER SHEETS (CATEGORY-1)

VARIANT NO.	DESCRIPTION	MATERIAL CODE
26.	1200mm Width, 400mm Height to 800mm width duct reducer tee (Type-A) with accessories including Joining plate-CAT 1.	PY9755148269
27.	1200mm Width, 400mm Height to 600mm width duct reducer tee (Type-A) with accessories including Joining plate-CAT 1.	PY9755148277
28.	1200mm Width, 400mm Height to 400mm width duct reducer tee (Type-A) with accessories including Joining plate-CAT 1.	PY9755148285
29.	1000mm Width, 400mm Height to 600mm width duct reducer tee (Type-A) with accessories including Joining plate-CAT 1.	PY9755148293
30.	1000mm Width, 400mm Height to 400mm width duct reducer tee (Type-A) with accessories including Joining plate-CAT 1.	PY9755148307
31.	800mm Width, 300mm Height to 400mm width duct reducer tee (Type-A) with accessories including Joining plate-CAT 1.	PY9755148315
32.	600mm Width, 300mm Height to 400mm width duct reducer tee (Type-A) with accessories including Joining plate-CAT 1.	PY9755148323

COPYRIGHT AND CONFIDENTIAL
The information on this document is the property of BHARAT HEAVY ELECTRICALS LIMITED .
It must not be used directly or indirectly in any way detrimental to the interest of the company.

MATERIAL CODES FOR DUCT REDUCER TEE (TYPE-B) WITH JOINTING PLATES AND COVER SHEETS (CATEGORY-1)

VARIANT NO.	DESCRIPTION	MATERIAL CODE
33.	1200mm Width, 400mm Height to 800mm width duct reducer tee (Type-B) with accessories including Joining plate-CAT 1.	PY9755148331
34.	1200mm Width, 400mm Height to 600mm width duct reducer tee (Type-B) with accessories including Joining plate-CAT 1.	PY9755148340
35.	1200mm Width, 400mm Height to 400mm width duct reducer tee (Type-B) with accessories including Joining plate-CAT 1.	PY9755148358
36.	1000mm Width, 400mm Height to 600mm width duct reducer tee (Type-B) with accessories including Joining plate-CAT 1.	PY9755148366
37.	1000mm Width, 400mm Height to 400mm width duct reducer tee (Type-B) with accessories including Joining plate-CAT 1.	PY9755148374
38.	800mm Width, 300mm Height to 400mm width duct reducer tee (Type-B) with accessories including Joining plate-CAT 1.	PY9755148382
39.	600mm Width, 300mm Height to 400mm width duct reducer tee (Type-B) with accessories including Joining plate-CAT 1.	PY9755148390

COPYRIGHT AND CONFIDENTIAL
The information on this document is the property of BHARAT HEAVY ELECTRICALS LIMITED .
It must not be used directly or indirectly in any way detrimental to the interest of the company.

TYPICAL ARRANGEMENT FOR DUCT ELBOW (HORIZONTAL PLANE) ALONG WITH ACCESSORIES AND JOINTING PLATES (CATEGORY-1)

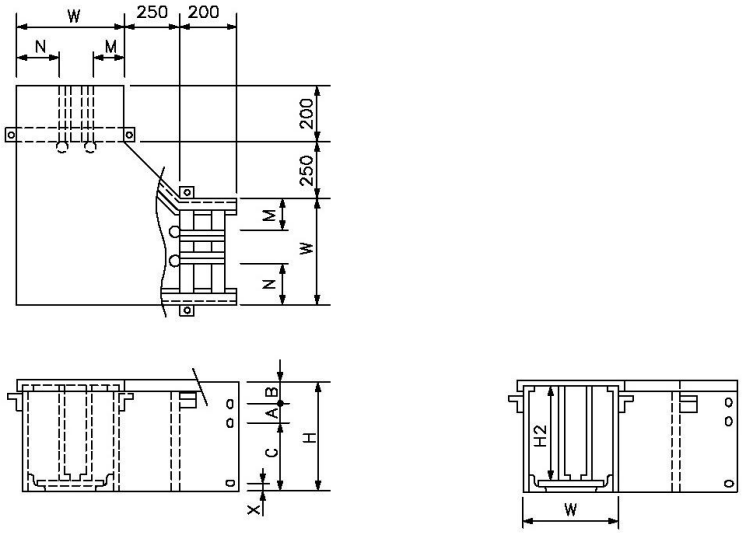

TYPE 'A'

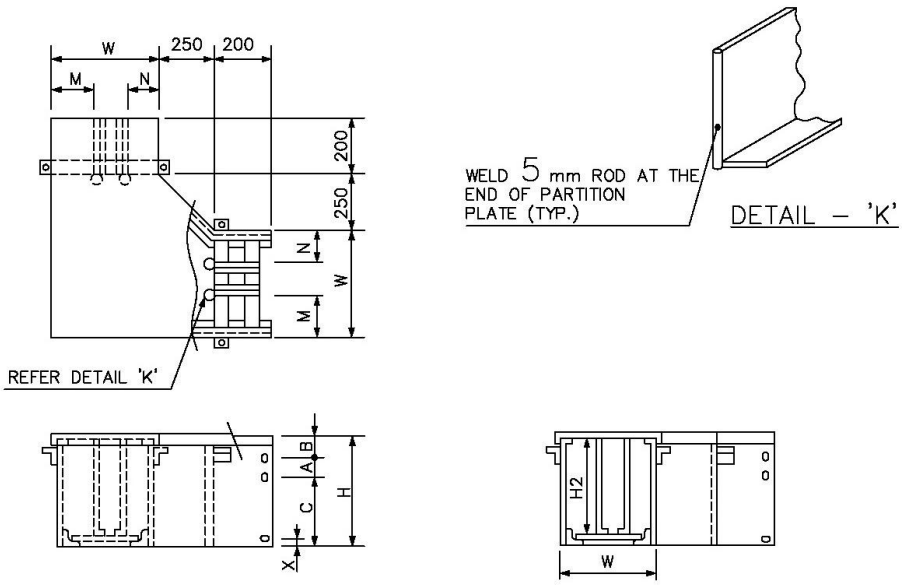

TYPE 'B'

DUCT ELBOW (HORIZONTAL PLANE)

COPYRIGHT AND CONFIDENTIAL
The information on this document is the property of BHARAT HEAVY ELECTRICALS LIMITED .
It must not be used directly or indirectly in any way detrimental to the interest of the company.

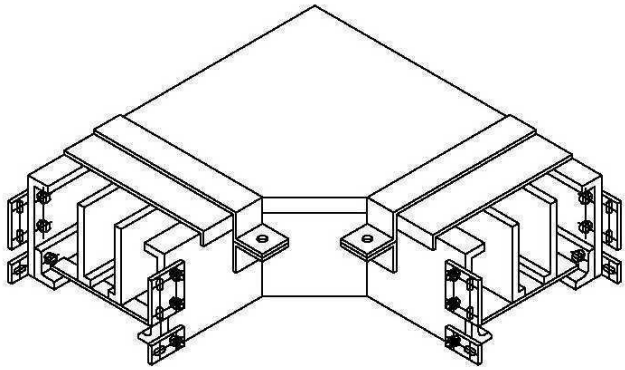

MATERIAL CODES FOR DUCT ELBOW (HORIZONTAL PLANE) – (TYPE-A) WITH JOINTING PLATES AND COVER SHEETS (CATEGORY-1)

VARIANT NO.	DESCRIPTION	MATERIAL CODE
40.	1200mm Width, 400mm Height duct elbow (horizontal plane) – (Type-A) with accessories including Joining plate-CAT 1.	PY9755148404
41.	1000mm Width, 400mm Height duct elbow (horizontal plane) - (Type-A) with accessories including Joining plate-CAT 1.	PY9755148412
42.	800mm Width, 300mm Height duct elbow (horizontal plane) - (Type-A) with accessories including Joining plate-CAT 1.	PY9755148420
43.	600mm Width, 300mm Height duct elbow (horizontal plane) - (Type-A) with accessories including Joining plate-CAT 1.	PY9755148439
44.	400mm Width, 200mm Height duct elbow (horizontal plane) - (Type-A) with accessories including Joining plate-CAT 1.	PY9755148447

COPYRIGHT AND CONFIDENTIAL
The information on this document is the property of BHARAT HEAVY ELECTRICALS LIMITED .
It must not be used directly or indirectly in any way detrimental to the interest of the company.

MATERIAL CODES FOR DUCT ELBOW (HORIZONTAL PLANE) – (TYPE-B) WITH JOINTING PLATES AND COVER SHEETS (CATEGORY-1)

VARIANT NO.	DESCRIPTION	MATERIAL CODE
45.	1200mm Width, 400mm Height duct elbow (horizontal plane) – (Type-B) with accessories including Joining plate-CAT 1.	PY9755148455
46.	1000mm Width, 400mm Height duct elbow (horizontal plane) – (Type-B) with accessories including Joining plate-CAT 1.	PY9755148463
47.	800mm Width, 300mm Height duct elbow (horizontal plane) – (Type-B) with accessories including Joining plate-CAT 1.	PY9755148471
48.	600mm Width, 300mm Height duct elbow (horizontal plane) – (Type-B) with accessories including Joining plate-CAT 1.	PY9755148480
49.	400mm Width, 200mm Height duct elbow (horizontal plane) – (Type-B) with accessories including Joining plate-CAT 1.	PY9755148498

COPYRIGHT AND CONFIDENTIAL
The information on this document is the property of BHARAT HEAVY ELECTRICALS LIMITED .
It must not be used directly or indirectly in any way detrimental to the interest of the company.

TYPICAL ARRANGEMENT FOR DUCT OFFSET BEND ALONG WITH ACCESSORIES AND JOINTING PLATES (CATEGORY-1)

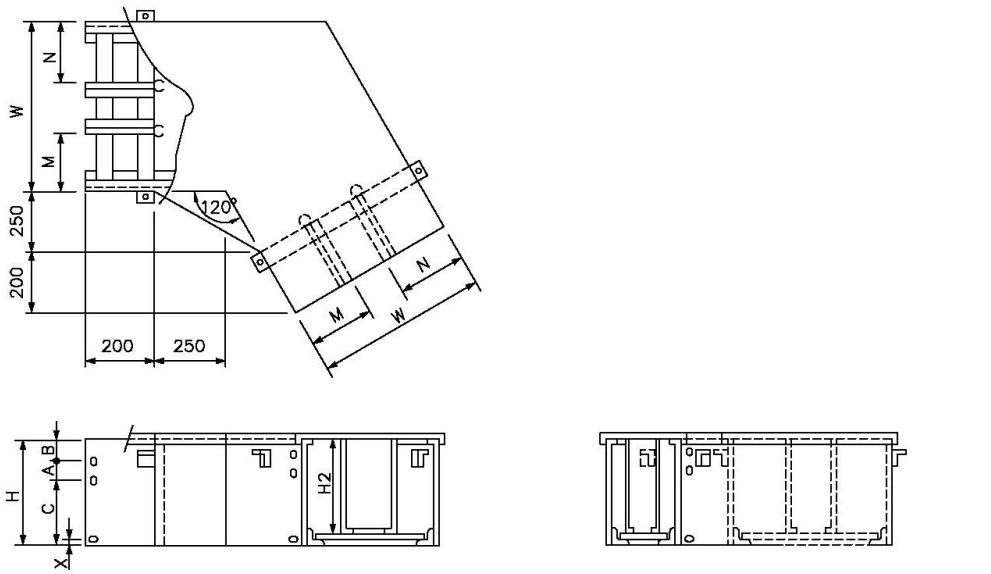

TYPE 'A'

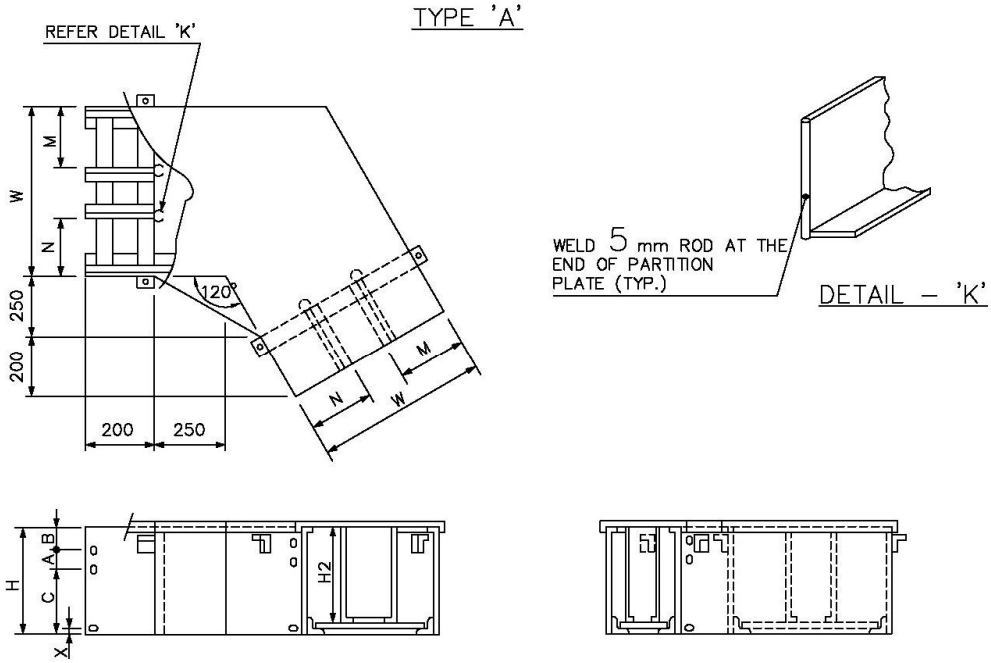

TYPE 'B'

DUCT OFFSET BEND

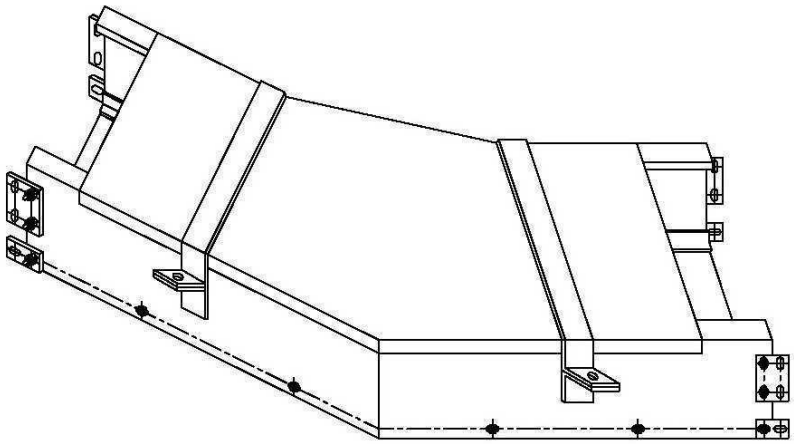

MATERIAL CODES FOR DUCT OFFSET BEND (TYPE-A) WITH JOINTING PLATES AND COVER SHEETS (CATEGORY-1)

VARIANT NO.	DESCRIPTION	MATERIAL CODE
50.	1200mm Width, 400mm Height duct offset bend (Type-A) with accessories including Joining plate-CAT 1.	PY9755148501
51.	1000mm Width, 400mm Height duct offset bend (Type-A) with accessories including Joining plate-CAT 1.	PY9755148510
52.	800mm Width, 300mm Height duct offset bend (Type-A) with accessories including Joining plate-CAT 1.	PY9755148528
53.	600mm Width, 300mm Height duct offset bend (Type-A) with accessories including Joining plate-CAT 1.	PY9755148536
54.	400mm Width, 200mm Height duct offset bend (Type-A) with accessories including Joining plate-CAT 1.	PY9755148544

COPYRIGHT AND CONFIDENTIAL
The information on this document is the property of BHARAT HEAVY ELECTRICALS LIMITED .
It must not be used directly or indirectly in any way detrimental to the interest of the company.

COPYRIGHT AND CONFIDENTIAL
The information on this document is the property of BHARAT HEAVY ELECTRICALS LIMITED .
It must not be used directly or indirectly in any way detrimental to the interest of the company.

MATERIAL CODES FOR DUCT OFFSET BEND (TYPE-B) WITH JOINTING PLATES AND COVER SHEETS (CATEGORY-1)

VARIANT NO.	DESCRIPTION	MATERIAL CODE
55.	1200mm Width, 400mm Height duct offset bend (Type-B) with accessories including Joining plate-CAT 1.	PY9755148552
56.	1000mm Width, 400mm Height duct offset bend (Type-B) with accessories including Joining plate-CAT 1.	PY9755148560
57.	800mm Width, 300mm Height duct offset bend (Type-B) with accessories including Joining plate-CAT 1.	PY9755148579
58.	600mm Width, 300mm Height duct offset bend (Type-B) with accessories including Joining plate-CAT 1.	PY9755148587
59.	400mm Width, 200mm Height duct offset bend (Type-B) with accessories including Joining plate-CAT 1.	PY9755148595

COPYRIGHT AND CONFIDENTIAL
The information on this document is the property of BHARAT HEAVY ELECTRICALS LIMITED .
It must not be used directly or indirectly in any way detrimental to the interest of the company.

TYPICAL ARRANGEMENT FOR DUCT WIDTH REDUCER - 'M' PATH STRAIGHT ALONG WITH ACCESSORIES AND JOINTING PLATES (CATEGORY-1)

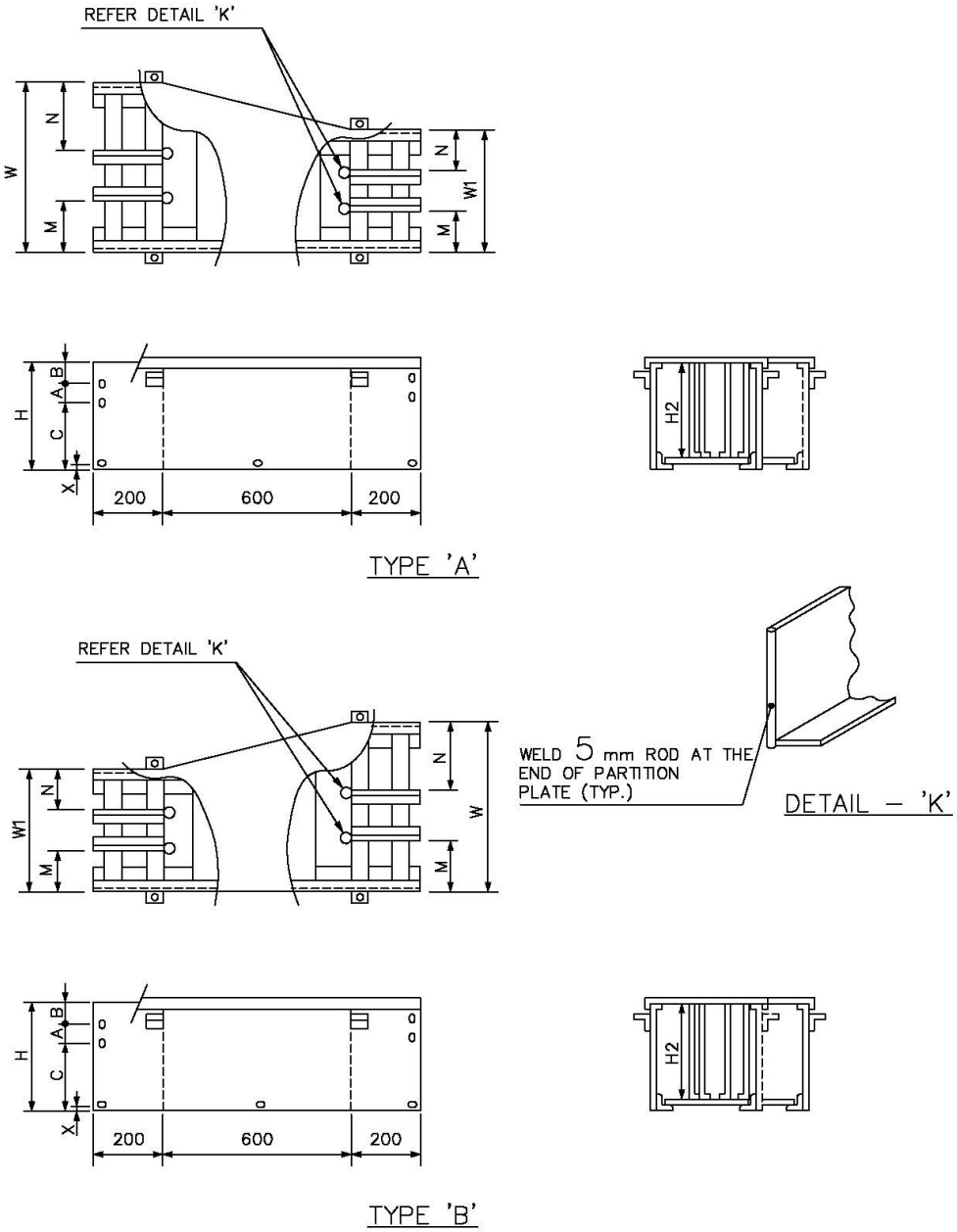

DUCT WIDTH REDUCER – 'M' PATH STRAIGHT

COPYRIGHT AND CONFIDENTIAL
The information on this document is the property of BHARAT HEAVY ELECTRICALS LIMITED .
It must not be used directly or indirectly in any way detrimental to the interest of the company.

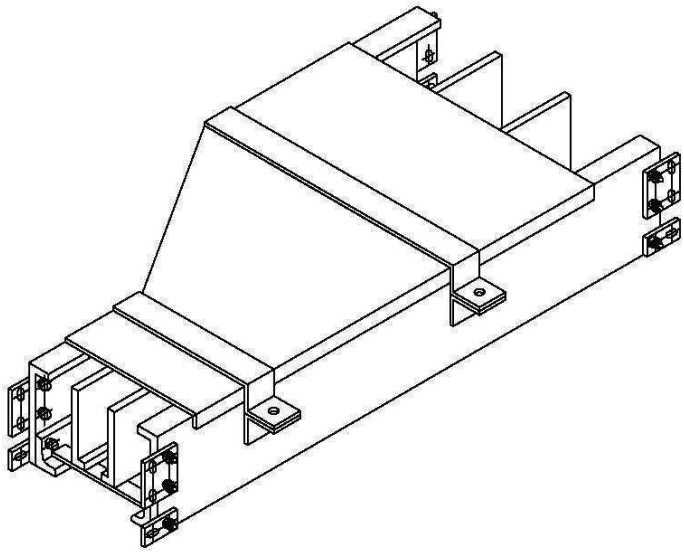

MATERIAL CODES FOR DUCT WIDTH REDUCER – 'M' PATH STRAIGHT (TYPE-A) WITH JOINTING PLATES AND COVER SHEETS (CATEGORY-1)

VARIANT NO.	DESCRIPTION	MATERIAL CODE
60.	1200mm Width to 800mm width, 300mm height duct width reducer –'M' path straight (Type-A) with accessories including Joining plate-CAT 1.	PY9755148609
61.	1200mm Width to 600mm width, 300mm height duct width reducer –'M' path straight (Type-A) with accessories including Joining plate-CAT 1.	PY9755148617
62.	1200mm Width to 400mm width, 200mm height duct width reducer –'M' path straight (Type-A) with accessories including Joining plate-CAT 1.	PY9755148625
63.	1000mm Width to 600mm width, 300mm height duct width reducer –'M' path straight (Type-A) with accessories including Joining plate-CAT 1.	PY9755148633
64.	1000mm Width to 400mm width, 200mm height duct width reducer –'M' path straight (Type-A) with accessories including Joining plate-CAT 1.	PY9755148641
65.	800mm Width to 400mm width, 200mm height duct width reducer –'M' path straight (Type-A) with accessories including Joining plate-CAT 1.	PY9755148650
66.	600mm Width to 400mm width, 200mm height duct width reducer –'M' path straight (Type-A) with accessories including Joining plate-CAT 1.	PY9755148668

COPYRIGHT AND CONFIDENTIAL
The information on this document is the property of BHARAT HEAVY ELECTRICALS LIMITED .
It must not be used directly or indirectly in any way detrimental to the interest of the company.

MATERIAL CODES FOR DUCT WIDTH REDUCER – 'M' PATH STRAIGHT WITH (TYPE-B) JOINTING PLATES AND COVER SHEETS (CATEGORY-1)

VARIANT NO.	DESCRIPTION	MATERIAL CODE
67.	1200mm Width to 800mm width, 300mm height duct width reducer –'M' path straight (Type-B) with accessories including Joining plate-CAT-1.	PY9755148676
68.	1200mm Width to 600mm width, 300mm height duct width reducer –'M' path straight (Type-B) with accessories including Joining plate-CAT-1.	PY9755148889
69.	1200mm Width to 400mm width, 200mm height duct width reducer –'M' path straight (Type-B) with accessories including Joining plate-CAT-1.	PY9755148692
70.	1000mm Width to 600mm width, 300mm height duct width reducer –'M' path straight (Type-B) with accessories including Joining plate-CAT-1.	PY9755148706
71.	1000mm Width to 400mm width, 200mm height duct width reducer –'M' path straight (Type-B) with accessories including Joining plate-CAT-1.	PY9755148714
72.	800mm Width to 400mm width, 200mm height duct width reducer –'M' path straight (Type-B) with accessories including Joining plate-CAT-1.	PY9755148722
73.	600mm Width to 400mm width, 200mm height duct width reducer –'M' path straight (Type-B) with accessories including Joining plate-CAT-1.	PY9755148730

COPYRIGHT AND CONFIDENTIAL
The information on this document is the property of BHARAT HEAVY ELECTRICALS LIMITED .
It must not be used directly or indirectly in any way detrimental to the interest of the company.

TYPICAL ARRANGEMENT FOR DUCT WIDTH REDUCER - 'N' PATH STRAIGHT ALONG WITH ACCESSORIES AND JOINTING PLATES (CATEGORY-1)

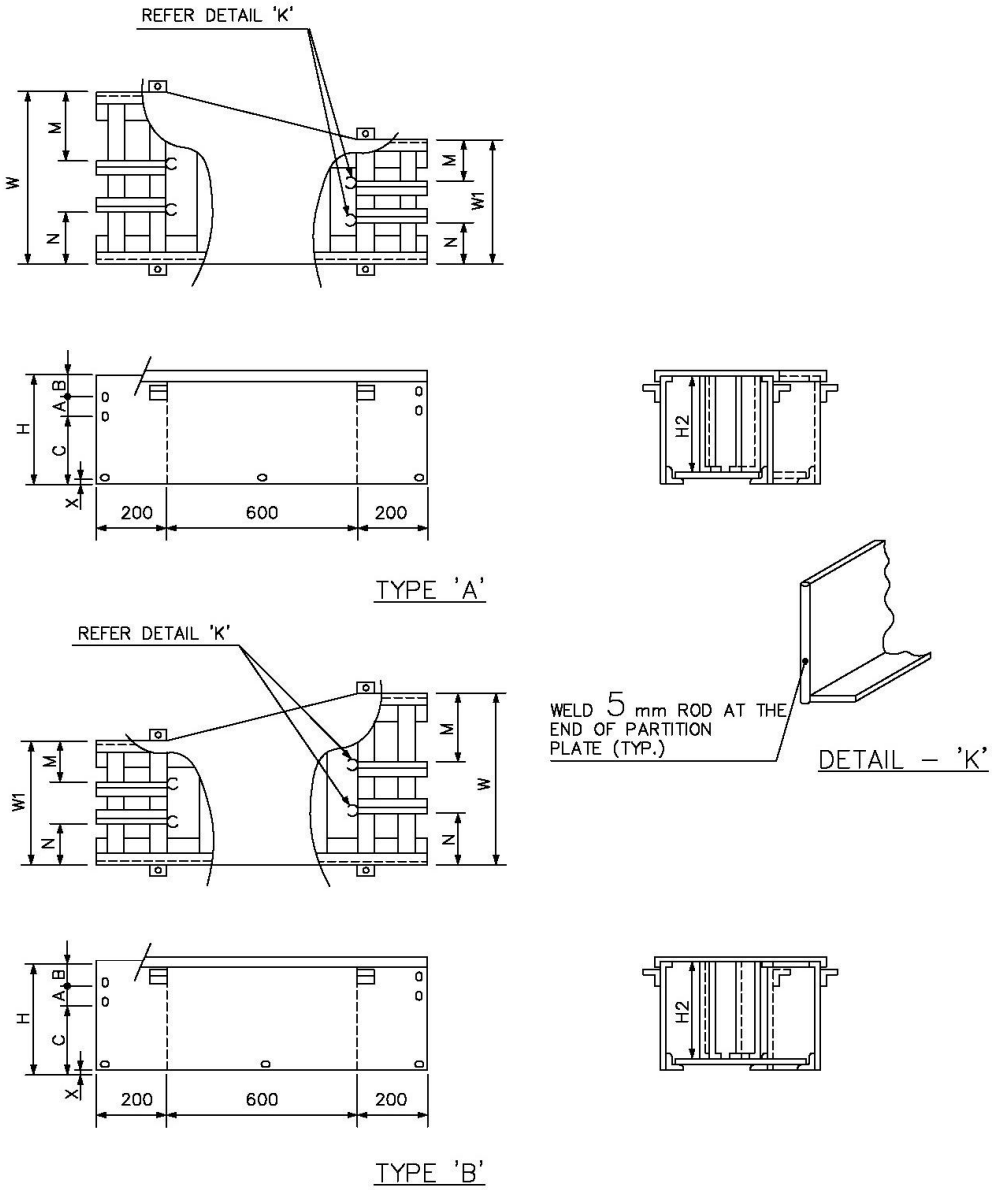

DUCT WIDTH REDUCER – 'N' PATH STRAIGHT

COPYRIGHT AND CONFIDENTIAL
The information on this document is the property of BHARAT HEAVY ELECTRICALS LIMITED .
It must not be used directly or indirectly in any way detrimental to the interest of the company.

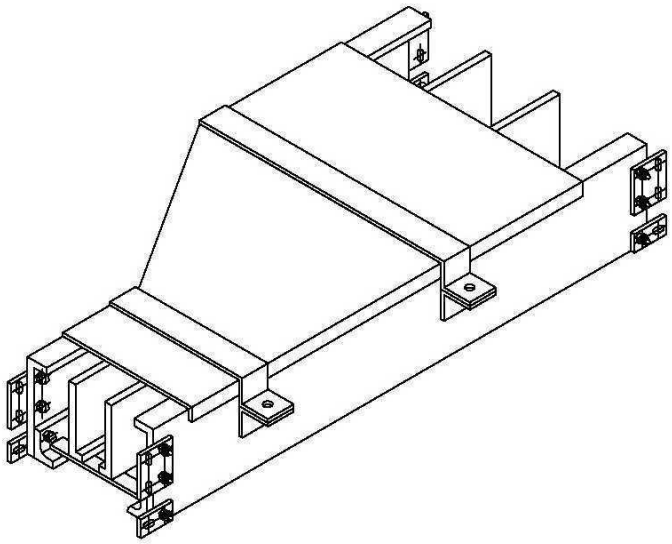

MATERIAL CODES FOR DUCT WIDTH REDUCER – 'N' PATH STRAIGHT (TYPE-A) WITH JOINTING PLATES AND COVER SHEETS (CATEGORY-1)

VARIANT NO.	DESCRIPTION	MATERIAL CODE
74.	1200mm Width to 800mm width, 300mm height duct width reducer –'N' path straight (Type-A) with accessories including Joining plate-CAT-1.	PY9755148749
75.	1200mm Width to 600mm width, 300mm height duct width reducer –'N' path straight (Type-A) with accessories including Joining plate-CAT-1.	PY9755148757
76.	1200mm Width to 400mm width, 200mm height duct width reducer –'N' path straight (Type-A) with accessories including Joining plate-CAT-1.	PY9755148765
77.	1000mm Width to 600mm width, 300mm height duct width reducer –'N' path straight (Type-A) with accessories including Joining plate-CAT-1.	PY9755148773
78.	1000mm Width to 400mm width, 200mm height duct width reducer –'N' path straight (Type-A) with accessories including Joining plate-CAT-1.	PY9755148781
79.	800mm Width to 400mm width, 200mm height duct width reducer –'N' path straight (Type-A) with accessories including Joining plate-CAT-1.	PY9755148790
80.	600mm Width to 400mm width, 200mm height duct width reducer –'N' path straight (Type-A) with accessories including Joining plate-CAT-1.	PY9755148803

COPYRIGHT AND CONFIDENTIAL
The information on this document is the property of BHARAT HEAVY ELECTRICALS LIMITED .
It must not be used directly or indirectly in any way detrimental to the interest of the company.

MATERIAL CODES FOR DUCT WIDTH REDUCER – 'N' PATH STRAIGHT (TYPE-B) WITH JOINTING PLATES AND COVER SHEETS (CATEGORY-1)

VARIANT NO.	DESCRIPTION	MATERIAL CODE
81.	1200mm Width to 800mm width, 300mm height duct width reducer –'N' path straight (Type-B) with accessories including Joining plate-CAT-1.	PY9755148811
82.	1200mm Width to 600mm width, 300mm height duct width reducer –'N' path straight (Type-B) with accessories including Joining plate-CAT-1.	PY9755148820
83.	1200mm Width to 400mm width, 200mm height duct width reducer –'N' path straight (Type-B) with accessories including Joining plate-CAT-1.	PY9755148838
84.	1000mm Width to 600mm width, 300mm height duct width reducer –'N' path straight (Type-B) with accessories including Joining plate-CAT-1.	PY9755148846
85.	1000mm Width to 400mm width, 200mm height duct width reducer –'N' path straight (Type-B) with accessories including Joining plate-CAT-1.	PY9755148854
86.	800mm Width to 400mm width, 200mm height duct width reducer –'N' path straight (Type-B) with accessories including Joining plate-CAT-1.	PY9755148862
87.	600mm Width to 400mm width, 200mm height duct width reducer –'N' path straight (Type-B) with accessories including Joining plate-CAT-1.	PY9755148870

GENERAL NOTES:

1. All dimensions are in mm
2. Standard minimum straight length of duct and cover shall be 2500mm.
3. Duct shall be fabricated out of standard size of angles, flats, rods and sheets /plates as Indian Standards.
4. Bolts, Nuts and Washers used shall be Carbon Steel Zinc /Cadmium Plated.
5. Duct shall be free of any burrs /sharp edges and welding shall be of good quality.
6. Painting of duct shall be carried out as per requirement.
7. With in the duct, the partition height shall be up to the duct cover, providing bottom support to the cover to prevent sagging.

COPYRIGHT AND CONFIDENTIAL
The information on this document is the property of BHARAT HEAVY ELECTRICALS LIMITED .
It must not be used directly or indirectly in any way detrimental to the interest of the company.

RECORD OF REVISIONS

Rev. No.	Date	Revision Details	Revised By	Approved By
00	30/07/15	Original Issue	---	@malick 30/07/15 ABU MALICK

COPYRIGHT AND CONFIDENTIAL
The information on this document is the property of BHARAT HEAVY ELECTRICALS LIMITED, It must not be used directly or indirectly in any way detrimental to the interest of the company.

Ref. Doc.